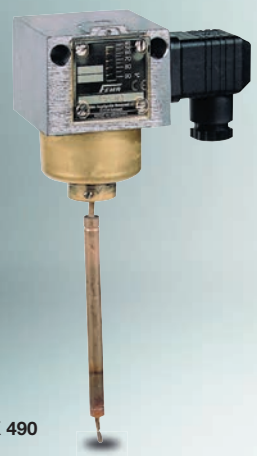

TX 490

# TX

## Rod thermostats (without immersion tube)

Rod thermostats are suitable for direct installation in tanks, piplines and air ducts. The immersion well can be fitted in advance.

**SIL 2 according IEC 61508-2**

### Technical data

| | |
|---|---|
| **Housing** | Diecast aluminium GD Al Si 12 according to DIN 1725. |
| **Mounting position** | Any, preferably vertical |
| **permitted. ambient temperature at switching device** | +70°C |
| **Max. perm. temperature at sensor** | See Product Summary |
| **Contact arrangement** | Single pole changeover switch |
| **Switching capacity** | 8 (5) A 250 VAC |
| **Degree of protection** | IP 54 according to DIN EN60529 (with vertical installation) |
| **Calibration** | Scale value corresponds to the lower switching point (with falling temperature), the upper switching point is higher by the amount of the switching differential |
| **Plug connection** | Via angled plug to DIN EN175301 (3-pin + earth contact), cable entry Pg 11, max. cable diameter 10 mm, cable outlet possible in 4 directions spaced 90° apart. Supplied with plug. |
| **Switching temperature** | Adjustable from outside with screwdriver |
| **Switching differential** | Not adjustable |

### Product Summary

| Type | Setting range | Switching differential (Tolerance) | Max. permissible temperature at sensor |
|---|---|---|---|
| **Immersion depth L =135 mm** | | | |
| **TX023** | –20 to + 30 °C | 0,8 ... 2,5 K | 110 °C |
| **TX150** | +10 to + 50 °C | 0,8 ... 2,5 K | 110 °C |
| **TX490** | +40 to + 90 °C | 0,7 ... 3,5 K | 125 °C |
| **Immersion depth L = 220 mm** | | | |
| **TXB023** | –20 to + 30 °C | 0,8 ... 2,5 K | 110 °C |
| **TXB150** | +10 to + 50 °C | 0,8 ... 2,5 K | 110 °C |
| **TXB490** | +40 to + 90 °C | 0,7 ... 3,5 K | 125 °C |

**-TX** see page 120

### Accessories

Immersion tube type R10/MS, R20/MS, R10/NST, R20/NST, RN20/MS, RN10/NST, RN20/NST, R6, R7
see page 148.

### Dimensioned drawing (mm)

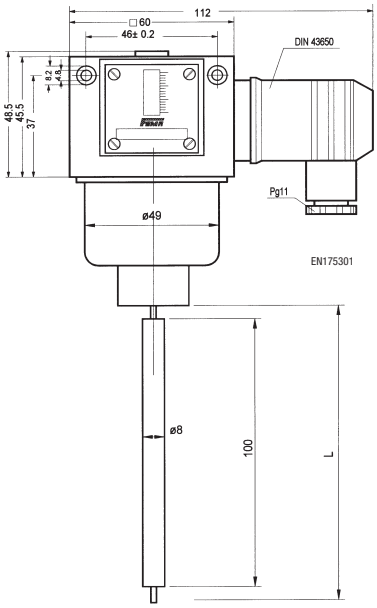


Note to non-available items:
In our article master all the possibe technical combinations are not created. Therefore we recommend the previous request for clarification and selection of an alternative solution.

Protection Class:
IP 54